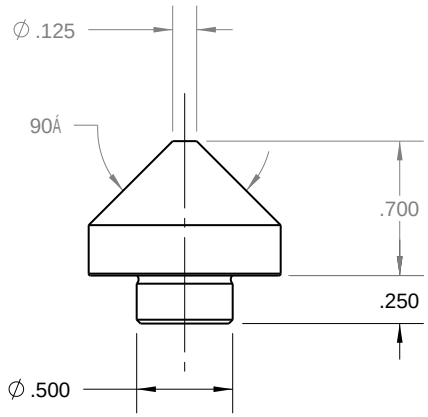

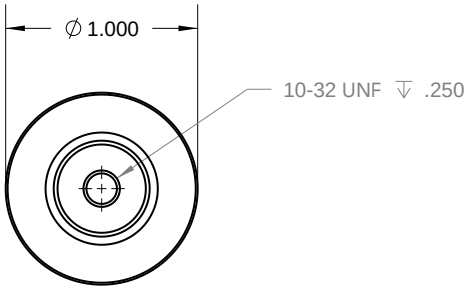

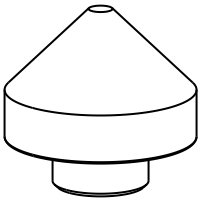

PROPRIETARY INFORMATION

THE INFORMATION CONTAINED IN THIS DRAWING IS THE SOLE PROPERTY OF MICRO SURFACE ENGR. INC. AND IS FURNISHED FOR INFORMATIONAL PURPOSES ONLY.

É 2006 MICRO SURFACE ENGR. INC.

UNLESS OTHERWISE SPECIFIED:

DIMENSIONS ARE IN INCHES

TOLERANCES:
ANGULAR: 1°
TWO PLACE DECIMAL ±.01
THREE PLACE DECIMAL ±.005

INTERPRET GEOMETRIC TOLERANCING PER: ANSI Y14.5

Bal-tec™
1550 E. SLAUSON AVE
LOS ANGELES, CA 90011

TITLE	NUMBER	REV
KINEMATIC CONE	CO-90-CPM	01

ENGINEER	DWN BY	DATE DRAWN	SIZE	SCALE	PAGE
GENE GLEASON	RJV	1/26/11	A	1:1	1 OF 1